文件資料管制 文件資料管制 文件資料管制 All rights reserved

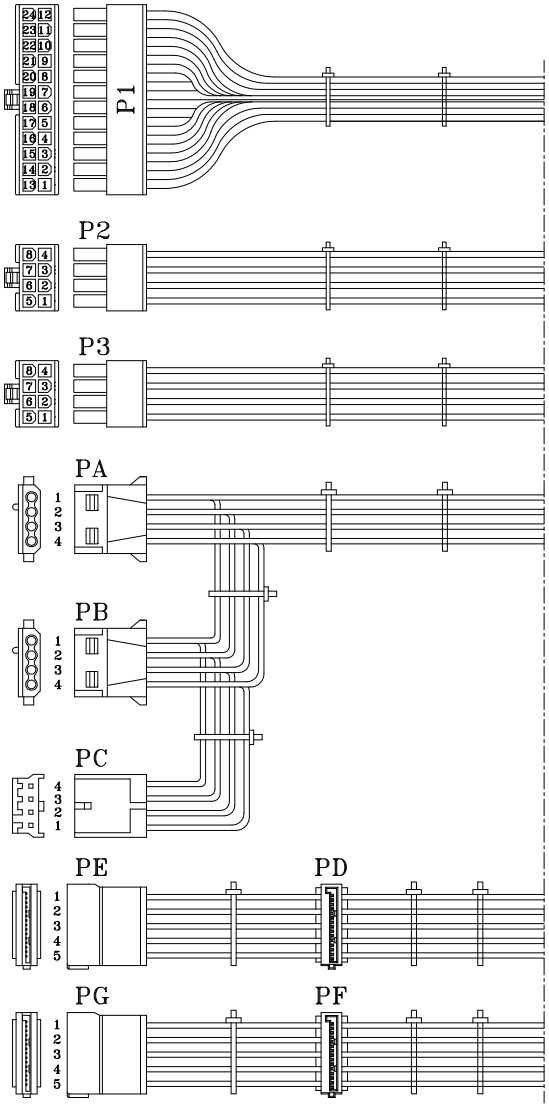

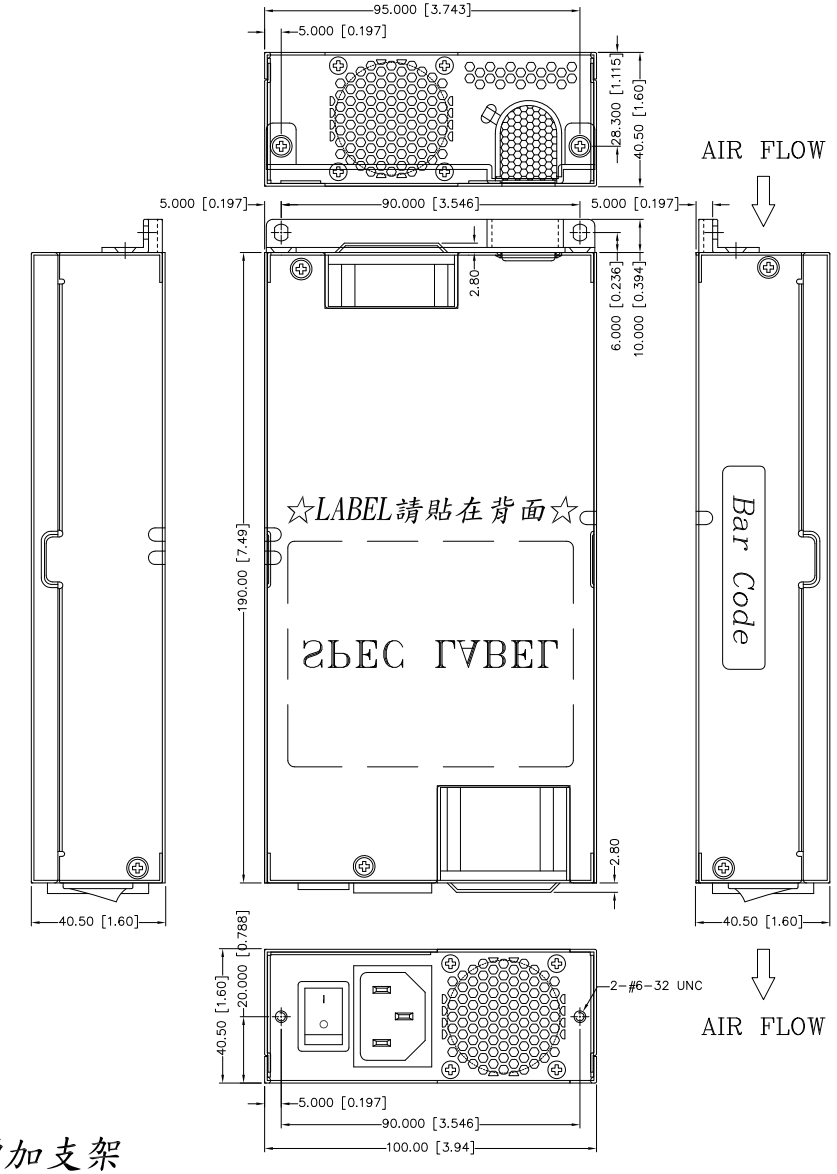

REF. ID.	PIN NO.	SIGNAL	WIRE COLOR	GAUGE	CONNECTOR TYPE	CABLE LENGTH
P1	1	+3.3V	ORANGE	18	MOLEX 39-01-2240 or EQUIV.	500±15mm
	2	+3.3V	ORANGE	18		
	3	COM	BLACK	18		
		COM	BLACK	24		
	4	+5V	RED	18		
	5	COM	BALCK	18		
	6	+5V	RED	18		
	7	COM	BALCK	18		
	8	PW-OK	GRAY	24		
	9	+5Vsb	PURPLE	18		
	10	+12V	YELLOW	18		
	11	+12V	YELLOW	18		
	12	+3.3V	ORANGE	18		
	13	+3.3V	ORANGE	18		
		+3.3Vsense	BROWN	24		
	14	-12V	BLUE	24		
	15	COM	BALCK	18		
	16	PS-ON	GREEN	24		
	17	COM	BALCK	18		
	18	COM	BALCK	18		
	19	COM	BALCK	18		
	20	-5V	WHITE	24		
	21	+5V	RED	18		
	22	+5V	RED	18		
	23	+5V	RED	18		
	24	COM	BALCK	18		
P2 P3	1	COM	BALCK	18	MOLEX 39-01-2080 or EQUIV.	500±15mm
	2	COM	BALCK	18		
	3	COM	BALCK	18		
	4	COM	BALCK	18		
	5	+12V	YELLOW	18		
	6	+12V	YELLOW	18		
	7	+12V	YELLOW	18		
	8	+12V	YELLOW	18		
PA	1	+12V	YELLOW	20	WST P4-A10202 or EQUIV.	500±15mm
	2	COM	BALCK	20		
	3	COM	BALCK	20		
	4	+5V	RED	20		
PB	1	+12V	YELLOW	20	WST P4-A10202 or EQUIV.	155±10mm
	2	COM	BALCK	20		
	3	COM	BALCK	20		
	4	+5V	RED	20		
PC	1	+5V	RED	22	AMP 171822-4 or EQUIV.	155±10mm
	2	COM	BALCK	22		
	3	COM	BALCK	22		
	4	+12V	YELLOW	22		
PD PF	1	+3.3V	ORANGE	20	MOLEX SD-67926-0311 or EQUIV.	500±15mm
	2	COM	BALCK	20		
	3	+5V	RED	20		
	4	COM	BALCK	20		
	5	+12V	YELLOW	20		
PE PG	1	+3.3V	ORANGE	20	MOLEX SD-67582-001 or EQUIV.	155±10mm
	2	COM	BALCK	20		
	3	+5V	RED	20		
	4	COM	BALCK	20		
	5	+12V	YELLOW	20		

NOTE:

1. ALL THE LENGTH OF OUTPUT WIRES EXCLUDE HOUSING.
2. 公差: .XX=±0.5 [0.02]、 .XXX=±0.25 [0.01]

UNIT:mm

〈2〉增加支架

P/N.:9PA500CN00

MODEL NO.: FSP500-50UCB(STD0001)		TITLE: ASSY	SHEET: 1 OF 1 REV:02
R&D(2)	PE	DRAWN	DATE
		樂家龍	May.27.2020
INTERIOR COUNTERSIGN:			

建立時間:2020-05-28 18:01:34
OAD-00004759-R02.pdf
1/1禁止翻印外洩 All rights reserved